Brightech®

Aspen LED Table Lamp Assembly Instruction

1.Remove all parts and place on a flat surface.

2.Screw glass shade (B) clockwise onto base (A) until it sits securely.
Note: Don’t screw it too tight. Due to the porousness of glass, if the globe is screwed too tight it may become difficult to be removed when needed.

3. Plug power adapter into lamp connector first, then into outlet.

Operation：
The Aspen Table Lamp is controlled via a three step touch sensor located at the bottom of the base. Simply tap the button to turn on and cycle through the dimmer settings.

Product Features and Information:
Max watt:5W
Dimmable:3-ways,Touch Switch
USB Charge: Max:5V=1A

GENERAL PRODUCT INFORMATION：
This product is suitable for dry locations only.

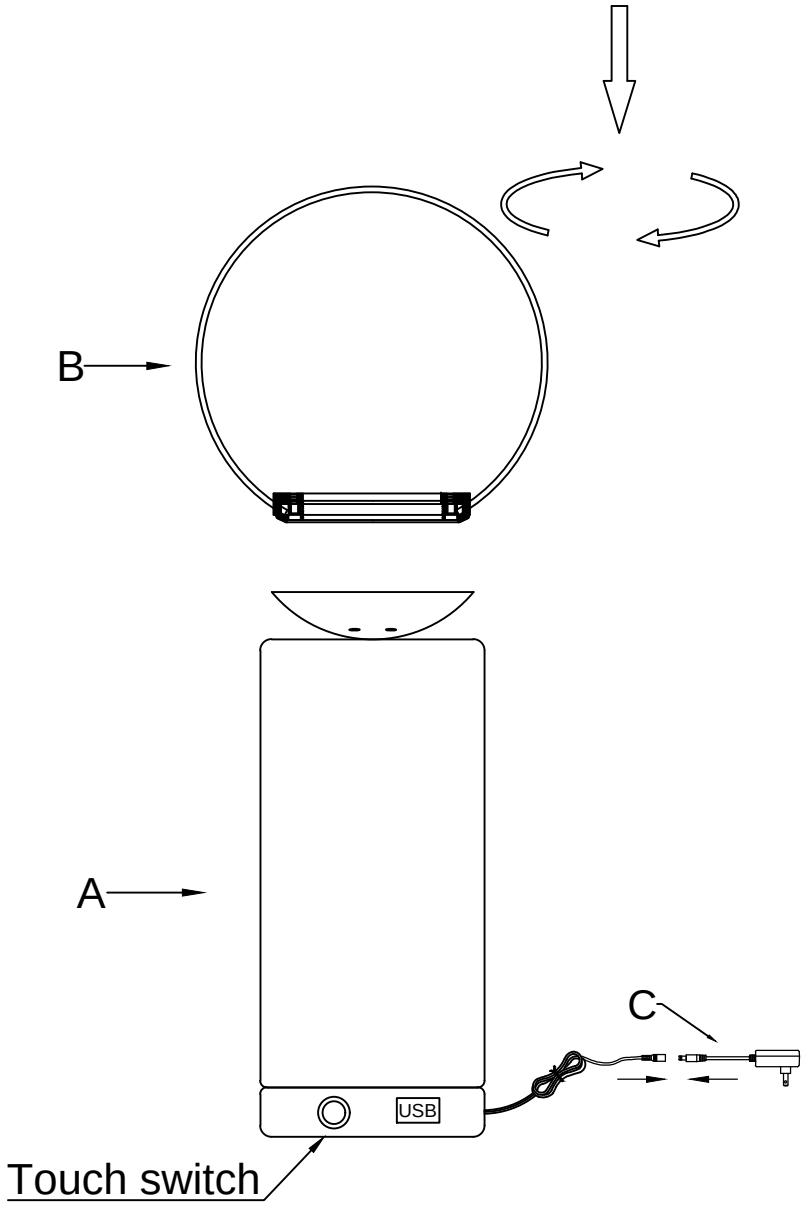

Brightech®
www.brightech.com